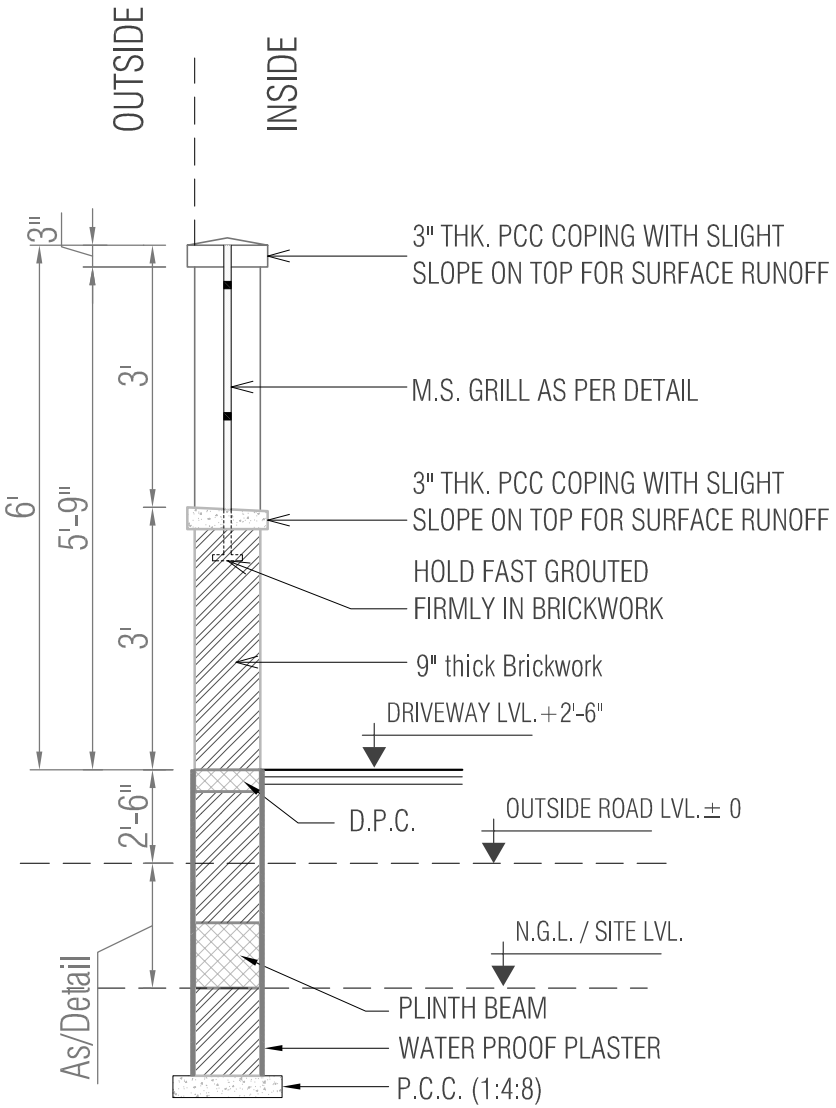

SECTION OF BOUNDARY WALL (SECTION CC)

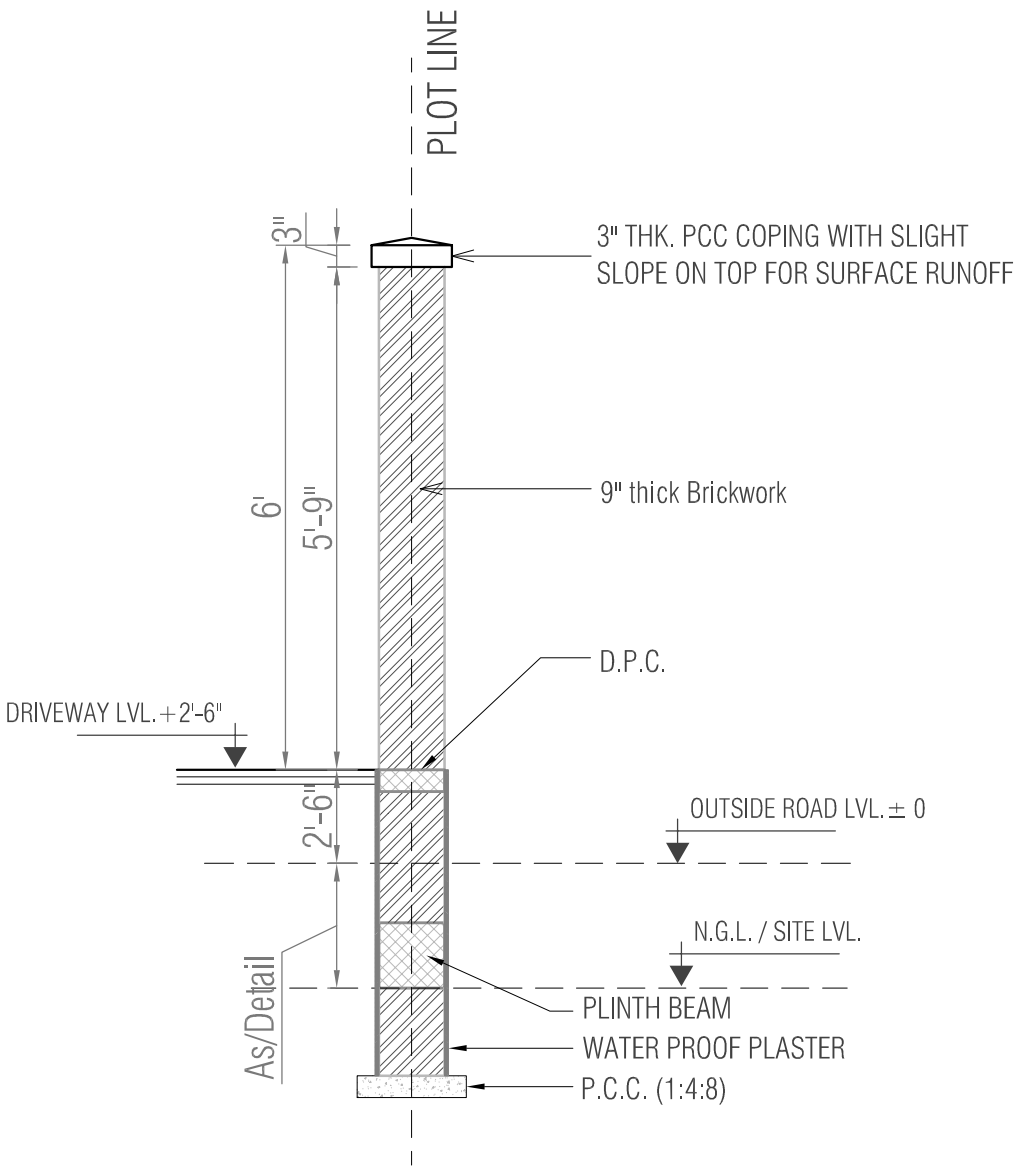

SECTION OF BOUNDARY WALL (SECTION DD)

PROJECT	SHEET TITLE	DRAWING					
PROPOSED BOUNDARY WALL FOR CENTRAL BANK OF INDIA AT SURVEY NO 176,HARDWARE PARK INDUSTRIAL AREA-BENGALURU	SITE BOUNDARY WALL DETAILS - 2	WORKING DRAWINGS	SCALE : N.T.S. DATE : 03. 09. 2016 DEALT BY : AMARNATH SHEET NO. : 02	REV. / DATE / DEALT / DETAILS R0 / 03.09.2016 / N.C. / -			